MECHATRONICS SYSTEM INTEGRATION

MCTA 3203

SECTION 1

SEMESTER 2, 2025/2026

WEEK 2:

DIGITAL LOGIC SYSTEM

INSTRUCTOR:

ASSOC. PROF. EUR. ING. IR. TS. GS. INV. DR ZULKIFLI BIN ZAINAL ABIDIN

GROUP 3

NO.	NAME	MATRIC NUM
1.	AMIR AIMAN BIN ARIFF AFFENDI	2315925
2.	ANIS AQILAH BINTI ABDULLAH	2329678
3.	AZRIL ULWAN BIN MOHAMMAD IMRI	2314617

DATE OF EXPERIMENT: 11 MARCH 2026

ABSTRACT

This project explores the fundamental concepts of digital logic systems and their role in mechatronic system integration through a practical Arduino-based project. It involves interfacing a 7-segment display with a microcontroller, which microcontroller used in experiment is Arduino Uno, to create a numerical counter that cycles from 0 to 9 using an increment push button and resets using a separate button. The project highlights the application of basic logic components such as logic gates and elements of arithmetic logic along with circuit interfacing and display control. By implementing this system, the experiment demonstrates key principles of signal control and hardware-software integration, while also introducing practical applications such as digital counters and interactive display systems, helping build a foundation for understanding more complex electronix and mechatronic designs.

TABLE OF CONTENTS

TABLE OF CONTENTS ……. 3

1.0 INTRODUCTION …….. 4

2.0 MATERIALS AND EQUIPMENTS ……..… 4

3.0 EXPERIMENTAL SETUP …….… 5

4.0 METHODOLOGY ……...…. 6 - 9

5.0 DATA COLLECTION …….……. 10

6.0 DATA ANALYSIS …… 11

7.0 RESULTS ……. 12 - 13

8.0 DISCUSSION …….. 13 - 14

9.0 CONCLUSION ……... 14

10.0 RECOMMENDATIONS …… 15

11.0 REFERENCES …….... 15

APPENDICES …….……. 16

ACKNOWLEDGEMENTS …… 17

STUDENTS' DECLARATION ……..… 18

1.0 INTRODUCTION

The integration of an Arduino board with a 7-segment display is demonstrated through the development of a numerical system that cycles numbers from 0 to 9 using push-button input. The Digital Logic System module provides a foundation in key concepts required for mechatronics applications, including logic gates, digital interfacing techniques, and basic arithmetic operations. In this project, a 7-segment display is interfaced with an Arduino Uni to generate numerical sequences, with push-button being used for incrementing and resetting the count. The activity reinforces understanding of logic-level signal control, the use of current-limiting resistors, and the role of programming in hardware control. This project helps to enhance students' understanding of fundamental digital electronics and microcontroller programming through circuit assembly on a breadboard, development of Arduino conde, and implementation of a basic counting algorithm and practical exposure to electronic system design.

2.0 MATERIALS AND EQUIPMENTS

1. Arduino Uno board

2. 1 Common cathode 7-segment display

3. 8 220-ohm resistors

4. 2 10k-ohm resistors

5. 2 Pushbuttons

6. Jumper wires

7. 1 Breadboard

6. USB Cable

3.0 EXPERIMENTAL SETUP

3.1 CIRCUIT CONFIGURATION

The hardware setup for the project involved connecting a common cathode 7-segment display and push-button to an Arduino Uno. Each of the seven segments (a until g) was connected to a separate digital output pin on the Arduino (D0 to D6), with 220-ohm resistors placed in series to limit current. The common cathode pin of the display was connected to one of the Arduino GND (ground) pins. The push-button was interfaced by connecting one leg of each button to individual digital input pins and the other leg to GND (ground) pin. Each push-button used a 10k-ohm resistor and connected between the digital input pin and the 5V supply from the Arduino Uno.

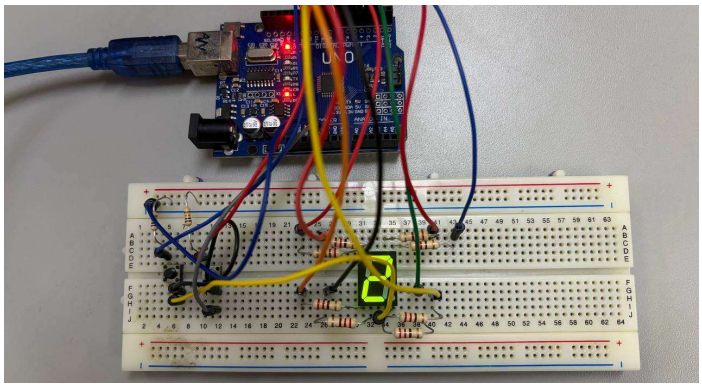

Figure 3.1.1 shows the circuit setup of the 7-segment display counter system

3.2 CIRCUIT ASSEMBLY

The complete circuit was assembled on a breadboard according to the connection layout. All components, including the Arduino Uno, 7-segment display, resistors and push-buttons, were positioned and connected to ensure operations, as illustrated using Tinkercad in Figure 3.2.1.

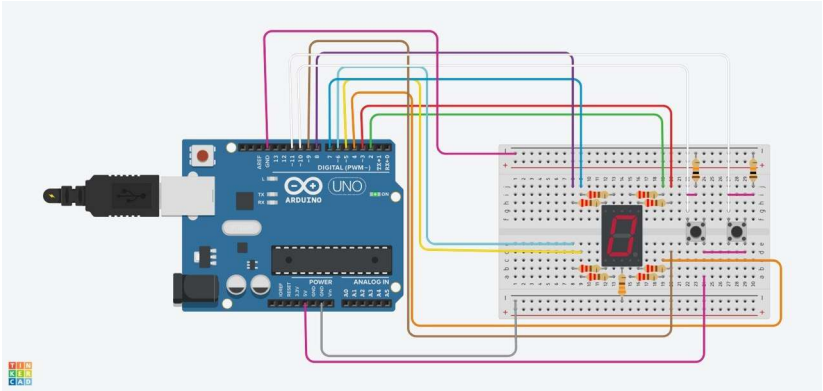

Figure 3.2.1 shows an illustration of a circuit assembly of the 7-segment display counter system using Tinkercad

4.0 METHODOLY

1. Circuit Construction:

The circuit was assembled on a breadboard according to the configuration outlined in the experimental setup. Each segment pin (a–g) of the display was linked to the Arduino digital pins (D2–D9) through 220 Ω resistors. Additionally, push buttons were interfaced with pins D10 and D11 using 10 kΩ pull-up resistors. The resistors were included to limit the current flowing to each LED segment and prevent potential damage.

2. Programming:

The Arduino Integrated Development Environment (IDE) was utilized to upload a C++ program for controlling the display. Digital pins D2–D9 were assigned to segments A–G and set as output pins. The push buttons were defined as input pins with pull-up resistor configuration. Conditional statements were implemented in the program to detect button inputs and determine which segments should be activated to display numbers from 0 to 9.

3. Operation:

- After uploading the code through Arduino IDE, the system was powered via the USB connection.
- When the increment button is pressed, the program increases the count variable by one and updates the 7-segment display accordingly.
- When the reset button is pressed, the count variable resets to zero, and the display shows “0”.

4. Observation:

When the increment button was pressed repeatedly, the 7-segment display advanced sequentially through the digits from 0 to 9. Each button press increased the displayed value by one, and after reaching 9, the display returned to 0, continuing the cycle. In addition, when the reset button was pressed, the display was immediately set back to “0” regardless of the current value. This behavior confirms that the control logic implemented in the program was functioning correctly, allowing both counting and resetting operations to be performed reliably.

5. **Code Behavior:**

The program utilizes multiple digitalWrite() functions to control the activation and deactivation of individual segments required to form each digit. By selectively turning specific segments on or off, the desired numerical output is displayed. A brief delay is incorporated between each transition to ensure the changes are clearly visible on the display. The programming code used for this experiment, developed in the Arduino IDE, is presented below:

week2_dld__2_.ino

```
// --- Individual Pin Definitions ---
// Segments a, b, c, d, e, f, g connected to D2 through D8
const int pinA = 2;
const int pinB = 3;
const int pinC = 4;
const int pinD = 5;
const int pinE = 6;
const int pinF = 8;
const int pinG = 7;

const int incButtonPin = 10;   // Increment button
const int resetButtonPin = 11; // Reset button

// --- Global Variables ---
int count = 0;
int lastIncState = HIGH;   // Assumes external pull-up resistors (HIGH when unpressed)
int lastResetState = HIGH;

void setup() {
  // Start Serial communication
  Serial.begin(9600);

  // Set all segment pins as OUTPUT explicitly
  pinMode(pinA, OUTPUT);
  pinMode(pinB, OUTPUT);
  pinMode(pinC, OUTPUT);
  pinMode(pinD, OUTPUT);
  pinMode(pinE, OUTPUT);
  pinMode(pinF, OUTPUT);
  pinMode(pinG, OUTPUT);

  // Set button pins as INPUT
  pinMode(incButtonPin, INPUT);
  pinMode(resetButtonPin, INPUT);
```

week2_dld__2_.ino

```
  // Initialize the display to show 0
  updateDisplay();
}

void loop() {
  // Read current state of both buttons
  int incState = digitalRead(incButtonPin);
  int resetState = digitalRead(resetButtonPin);

  // --- Increment Button Logic ---
  if (incState == LOW && lastIncState == HIGH) {
    delay(50); // Debounce
    if (digitalRead(incButtonPin) == LOW) {
      count++;
      if (count > 9) count = 0;
      updateDisplay();
    }
  }

  // --- Reset Button Logic ---
  if (resetState == LOW && lastResetState == HIGH) {
    delay(50); // Debounce
    if (digitalRead(resetButtonPin) == LOW) {
      count = 0;
      updateDisplay();
    }
  }

  // Save current states for the next loop
  lastIncState = incState;
  lastResetState = resetState;
}
```

week2_dld__2_.ino

```
// Function to update the display using a switch statement instead of an array
void updateDisplay() {
  switch (count) {
    case 0:
      digitalWrite(pinA, LOW); digitalWrite(pinB, LOW); digitalWrite(pinC, LOW);
      digitalWrite(pinD, LOW); digitalWrite(pinE, LOW); digitalWrite(pinF, LOW);
      digitalWrite(pinG, HIGH);
      break;
    case 1:
      digitalWrite(pinA, HIGH);  digitalWrite(pinB, LOW); digitalWrite(pinC, LOW);
      digitalWrite(pinD, HIGH);  digitalWrite(pinE, HIGH);  digitalWrite(pinF, HIGH);
      digitalWrite(pinG, HIGH);
      break;
    case 2:
      digitalWrite(pinA, LOW); digitalWrite(pinB, LOW); digitalWrite(pinC, HIGH);
      digitalWrite(pinD, LOW); digitalWrite(pinE, LOW); digitalWrite(pinF, HIGH);
      digitalWrite(pinG, LOW);
      break;
    case 3:
      digitalWrite(pinA, LOW); digitalWrite(pinB, LOW); digitalWrite(pinC, LOW);
      digitalWrite(pinD, LOW); digitalWrite(pinE, HIGH);  digitalWrite(pinF, HIGH);
      digitalWrite(pinG, LOW);
      break;
    case 4:
      digitalWrite(pinA, HIGH);  digitalWrite(pinB, LOW); digitalWrite(pinC, LOW);
      digitalWrite(pinD, HIGH);  digitalWrite(pinE, HIGH);  digitalWrite(pinF, LOW);
      digitalWrite(pinG, LOW);
      break;
    case 5:
      digitalWrite(pinA, LOW); digitalWrite(pinB, HIGH);  digitalWrite(pinC, LOW);
      digitalWrite(pinD, LOW); digitalWrite(pinE, HIGH);  digitalWrite(pinF, LOW);
      digitalWrite(pinG, LOW);
      break;
```

```
    case 6:
      digitalWrite(pinA, LOW); digitalWrite(pinB, HIGH);  digitalWrite(pinC, LOW);
      digitalWrite(pinD, LOW); digitalWrite(pinE, LOW); digitalWrite(pinF, LOW);
      digitalWrite(pinG, LOW);
      break;
    case 7:
      digitalWrite(pinA, LOW); digitalWrite(pinB, LOW); digitalWrite(pinC, LOW);
      digitalWrite(pinD, HIGH);  digitalWrite(pinE, HIGH);  digitalWrite(pinF, HIGH);
      digitalWrite(pinG, HIGH);
      break;
    case 8:
      digitalWrite(pinA, LOW); digitalWrite(pinB, LOW); digitalWrite(pinC, LOW);
      digitalWrite(pinD, LOW); digitalWrite(pinE, LOW); digitalWrite(pinF, LOW);
      digitalWrite(pinG, LOW);
      break;
    case 9:
      digitalWrite(pinA, LOW); digitalWrite(pinB, LOW); digitalWrite(pinC, LOW);
      digitalWrite(pinD, LOW); digitalWrite(pinE, LOW);  digitalWrite(pinF, LOW);
      digitalWrite(pinG, LOW);
      break;
  }
}
```

5.0 DATA COLLECTION

- **Description of Data and Instrument**

The experiment was carried out using an Arduino Uno microcontroller, a common cathode 7-segment display, two push buttons (increment and reset), and 220 Ω resistors. The Arduino Uno functioned as the primary control unit, generating digital signals to drive each segment (a–g) of the display. The push buttons were used as manual input controls, allowing the user to increment the displayed value or reset it to zero. The inclusion of resistors helped regulate current flow, ensuring the LED segments operate safely and efficiently throughout the experiment.

- **Observation Data**

During the experiment, data was recorded based on the display response to button presses. The expected and observed outcomes are shown below.

Button Presses	Expected Display	Observed Display
-	0	0
1	1	1
2	2	2
3	3	3
4	4	4
5	5	5
6	6	6
7	7	7
8	8	8
9	9	9
10	0	0
Reset	0	0

6.0 DATA ANALYSIS

The data collected was analyzed to verify the logical consistency of the Arduino code with the display outputs. Each number (0–9) corresponds to a unique binary pattern that activates specific segments (a–g).

Decimal	Binary Input	Segment ON (a-g)
0	0000	a,b,c,e,f,g
1	0001	a,g
2	0010	a,b,d,e,f
3	0011	a,b,d,f,g
4	0100	a,c,d,g
5	0101	b,c,d,f,g
6	0110	b,c,d,e,f,g
7	0111	a,b,g
8	1000	a,b,c,d,e,f,g
9	1001	a,b,c,d,f,g

The results shows that :

- The experiment reflects how combinational logic can be implemented in hardware systems using microcontrollers.
- The push-button interfaced allowed manual binary incrementation and reset behavior.
- Arduino succesfully implemented digital logic functions to represents decimal digits.

7.0 RESULTS

The results indicate that the 7-segment display counter system functioned as intended. Each button press produced the correct numerical output, displaying digits from 0 to 9 in sequence, while the reset button returned the count to 0. The corresponding visual output observed during testing are presented in the figures below, illustrating each number displayed on the 7-segment module.

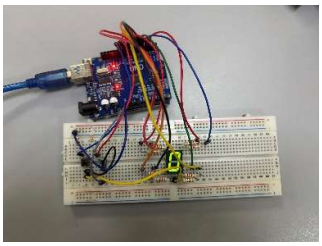 Figure 7.1: The 7-segment displayed number 0	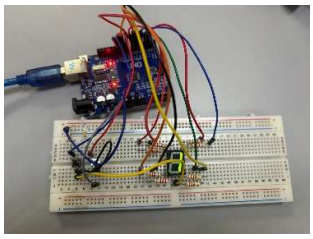 Figure 7.1: The 7-segment displayed number 1
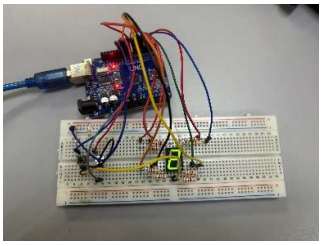 Figure 7.1: The 7-segment displayed number 2	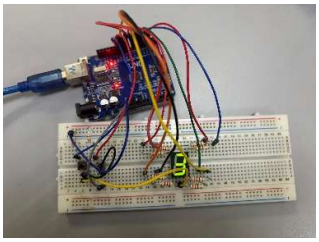 Figure 7.1: The 7-segment displayed number 3
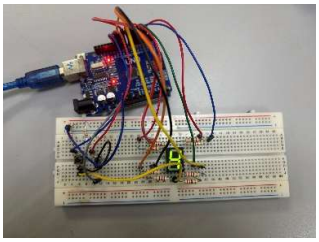 Figure 7.1: The 7-segment displayed number 4	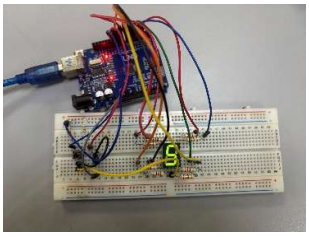 Figure 7.1: The 7-segment displayed number 5

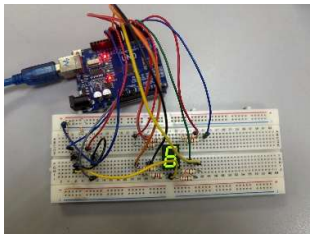 Figure 7.1: The 7-segment displayed number 6	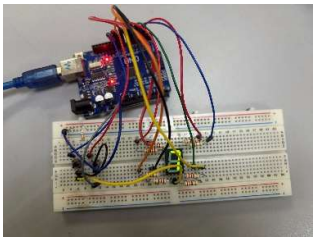 Figure 7.1: The 7-segment displayed number 7
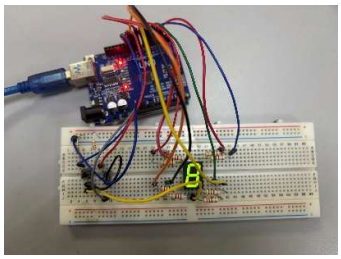 Figure 7.1: The 7-segment displayed number 8	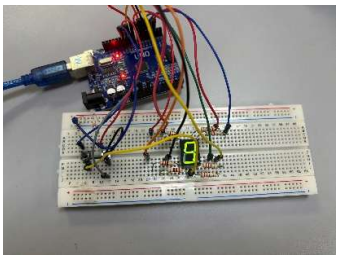 Figure 7.1: The 7-segment displayed number 9

8.0 DISCUSSION

The experiment effectively demonstrated how to interface a 7-segment display with an Arduino Uno to show digits from 0 to 9. The system operated correctly, as the increment button allowed the numbers to increase in sequence, while the reset button brought the display back to zero. This verified that both the hardware setup and the Arduino program were working properly to perform digital counting. In addition, the experiment offered valuable insight into digital logic applications, electronic interfacing, and the connection between microcontroller programming and actual circuit behavior. It also highlighted how basic control logic can be developed further into more advanced systems, such as digital counters and timing devices.

However, several issues were encountered during the experiment. At first, the circuit did not operate as expected due to differences in the pin configuration of the 7-segment display. The arrangement of segments (a–g) did not match the wiring assumed in the original Arduino code, resulting in incorrect digits or incomplete patterns being shown. This problem was resolved by identifying the correct pin layout and modifying both the connections and the code accordingly. Another issue involved the reset push button, which initially did not work properly. After troubleshooting, it was found that the component was faulty. Replacing

it with a new push button restored proper operation, and the reset function performed as expected thereafter.

Some limitations and sources of error were also noted throughout the experiment. The use of mechanical push buttons introduced switch bounce, causing multiple unintended increments or resets when pressed rapidly. Additionally, loose jumper connections on the breadboard sometimes led to inconsistent illumination or partial lighting of segments. Variations in resistor tolerances and contact resistance could also result in uneven brightness among the display segments. Furthermore, minor timing inconsistencies in the program's delay functions might have slightly affected the responsiveness of the display updates. Despite these limitations, the overall performance of the circuit was satisfactory, and the experiment successfully met its objectives by demonstrating the fundamental principles of digital interfacing, troubleshooting, and system correction in a practical setting.

9.0 CONCLUSION

The experiment successfully demonstrated the practical application of digital logic principles through the control of a 7-segment display using an Arduino microcontroller. By building and programming the circuit, students gained a deeper understanding of logic gate functions, digital output manipulation, and sequential control systems. The results showed that digital logic serves as the core foundation for data representation and hardware interfacing in mechatronic systems. Additionally, the activity fostered skills in troubleshooting, coding, and component connection—key competencies in embedded system development.

10.0 RECOMMENDATIONS

1. Enhance the Experiment: Extend the project to include dual or multiplexed 7-segment displays to show multi-digit numbers or sensor readings.

2. Incorporate I2C or SPI Displays: Implement I2C LCDs or LED matrix displays to explore more efficient communication protocols and complex visual outputs.

3. Introduce Logic Simulation Software: Before hardware implementation, use simulation tools (e.g., Proteus or TinkerCAD) to visualize circuit behavior and minimize wiring errors.

4. Integrate Sensor Input: Connect a digital sensor (e.g., temperature or proximity) to display real-time data on the 7-segment display to strengthen system integration skills.

5. Focus on Optimization: Encourage students to use modular coding techniques and power-efficient circuit designs for practical mechatronic applications.

11.0 REFERENCES

Hobby, S. 2025, *How does a 7 segment display work | Arduino with 7 segment display | Step by Step instructions*. SriTu Hobby. https://srituhobby.com/how-does-a-7-segment-display-work-arduino-with-7-segment-display-step-by-step-instructions/

SriTu Hobby. 2020, *SEGMENT DISPLAY ARDUINO tutorial | seven SEGMENT DISPLAY ARDUINO UNO [code and circuit diagram]* [Video]. YouTube. https://www.youtube.com/watch?v=wlwNwWaVT70

Tec4electronics. 2020, *How to use 7 segment Display with Arduino Uno | Interfacing | Coding* [Video]. YouTube. https://www.youtube.com/watch?v=ONpQdgXUjng

LearnElectronics India. 2020, *Interfacing a 7 Segment Display with Arduino | How to create a simple counter | Countdown display* [Video]. YouTube. https://www.youtube.com/watch?v=DZUlLy-NC-c

APPENDICES

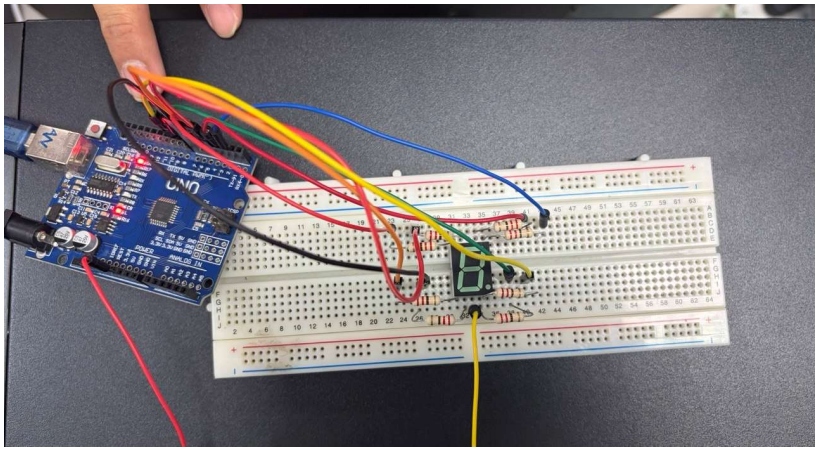

Before push-button attached to the system

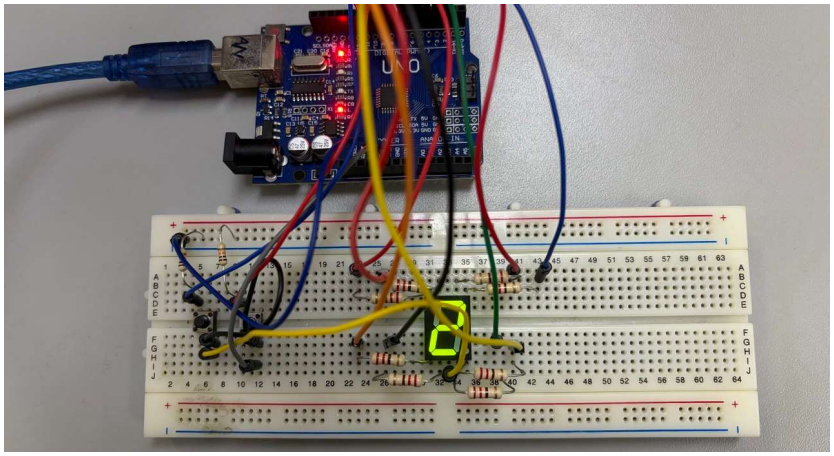

After push-button attached to the system

ACKNOWLEDGEMENTS

The group would like to express our deepest appreciation to our laboratory instructor, Assoc. Prof. Eur. Ing. Ir. Ts. Gs. Inv. Dr. Zulkifli bin Zainal Abidin for the continuous guidance, encouragement, and clear explanations provided throughout the course of this experiment. His expertise and detailed feedback greatly enhanced our understanding of digital logic systems and circuit interfacing, especially in applying theoretical knowledge to practical implementation. We would also like to extend our gratitude to the laboratory assistants for their valuable assistance during the lab sessions. Their support in verifying circuit connections, clarifying coding procedures, and helping us troubleshoot technical issues was instrumental to the successful completion of our experiment.

In addition, we would like to thank our classmates and also group members, Anis Aqilah Binti Abdullah, Amir Aiman bin Ariff Affendi and Azril Ulwan Bin Mohammad Imri for their cooperation and willingness to share insights, suggestions, and resources during the experiment. Collaborative discussions and teamwork played a crucial role in identifying and resolving problems efficiently. Lastly, we appreciate the opportunity provided by the Department of Mechatronics Engineering to conduct this experiment, which allowed us to strengthen our practical skills in Arduino programming, electronic interfacing, and logical circuit design. The collective guidance and support from all parties involved contributed significantly to the success and learning outcome of this project.

STUDENTS' DECLARATION

Certificate of Originality and Authenticity

This is to certify that we are **responsible** for the work submitted in this report, that **the original work** is our own except as specified in the references and acknowledgment, and that the original work contained herein has not been untaken or done by unspecified sources or persons. We hereby certify that this report **has not been done by only one individual**, and **all of us have contributed to the report**. The length of contribution to the reports by each individual is noted within this certificate. We also hereby certify that we have **read** and **understand** the content of the total report, and no further improvement on the reports is needed from any of the individual contributors to the report. We therefore agreed unanimously that this report shall be submitted for **marking**, and this **final printed report** has been **verified by us**.

Signature: Name: Amir Aiman Bin Ariff Affendi Matric Number: 2315925 Contributions: Conclusion, Recommendations, References, Appendices, Acknowledgements	Read [/] Understand [/] Agree [/]
Signature: Name: Anis Aqilah Binti Abdullah Matric Number: 2329678 Contributions: Introduction, Material and Equipment, Experimental Setup, Results	Read [/] Understand [/] Agree [/]
Signature: Name: Azril Ulwan Bin Mohammad Imri Matric Number: 2314617 Contributions: Methodology, Data Collection, Data Analysis, Discussions	Read [/] Understand [/] Agree [/]